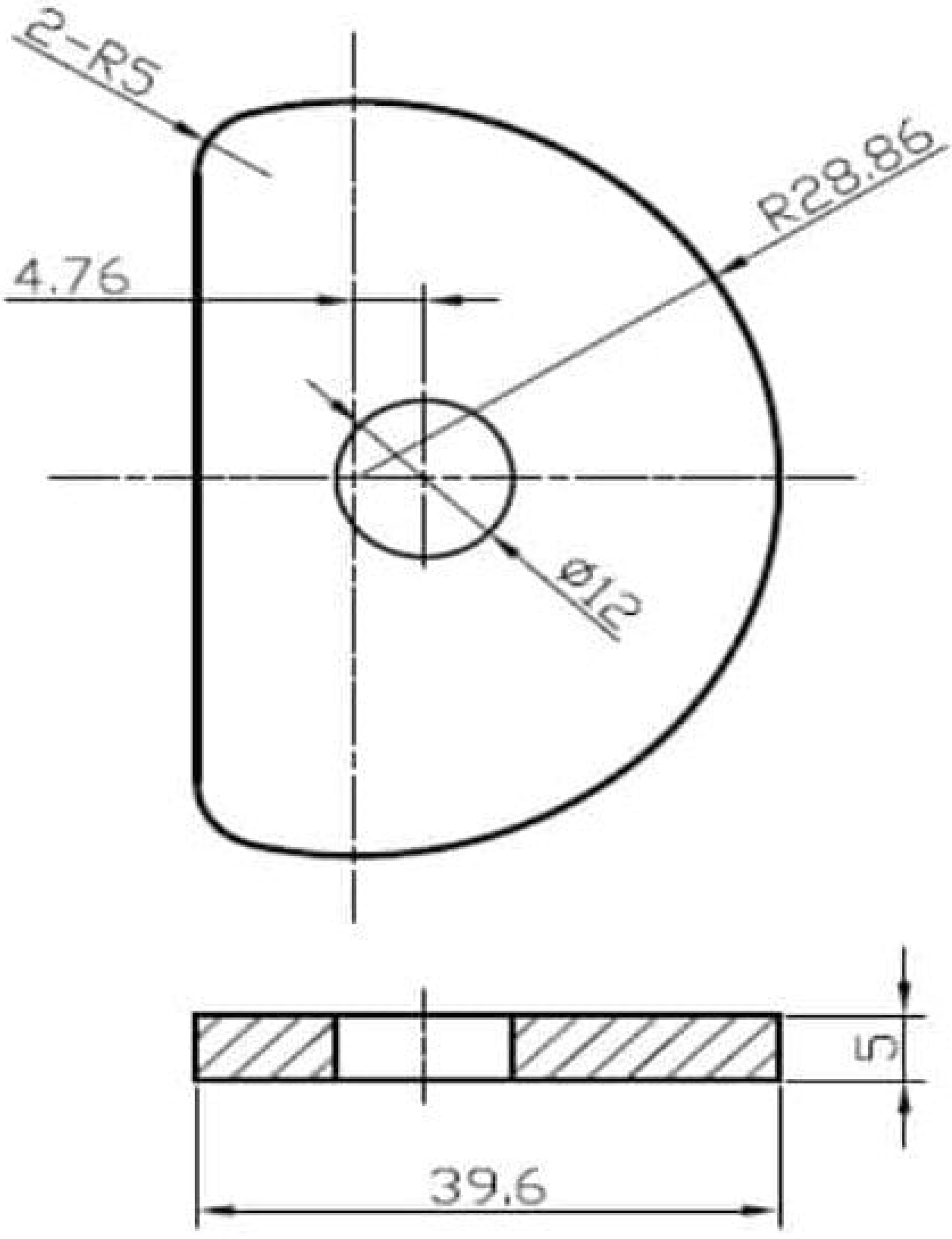
2-R5
R28.86
4.76
ø12
5
39.6