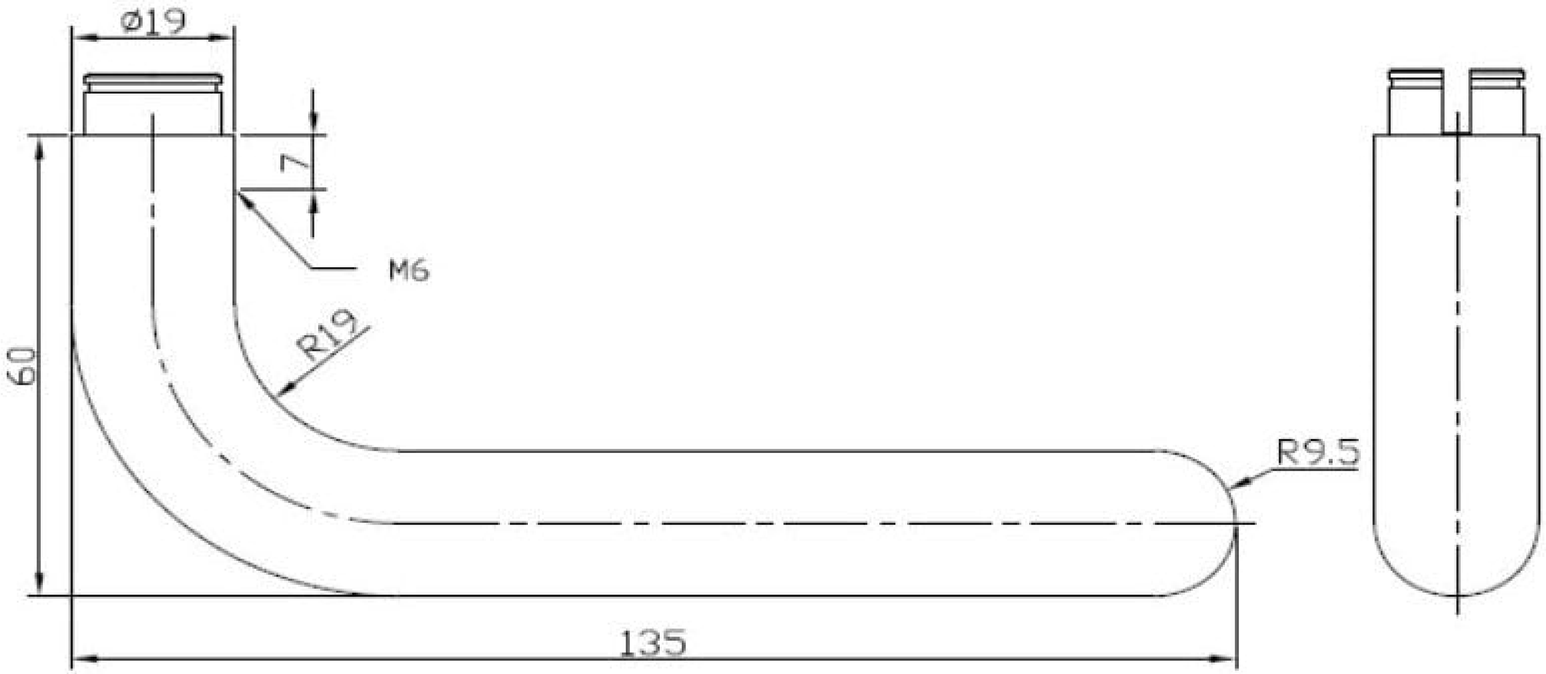
Ø19
7
M6
R19
60
R9.5
135

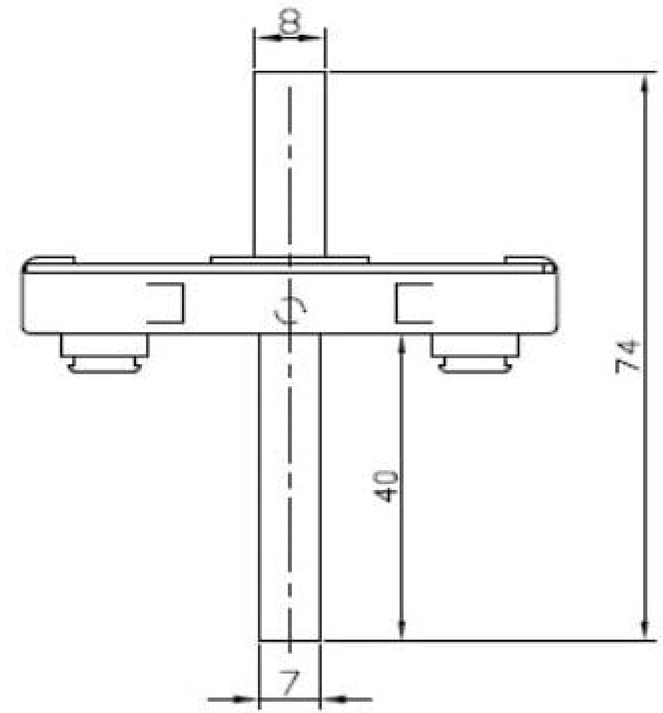
8
74
40
7

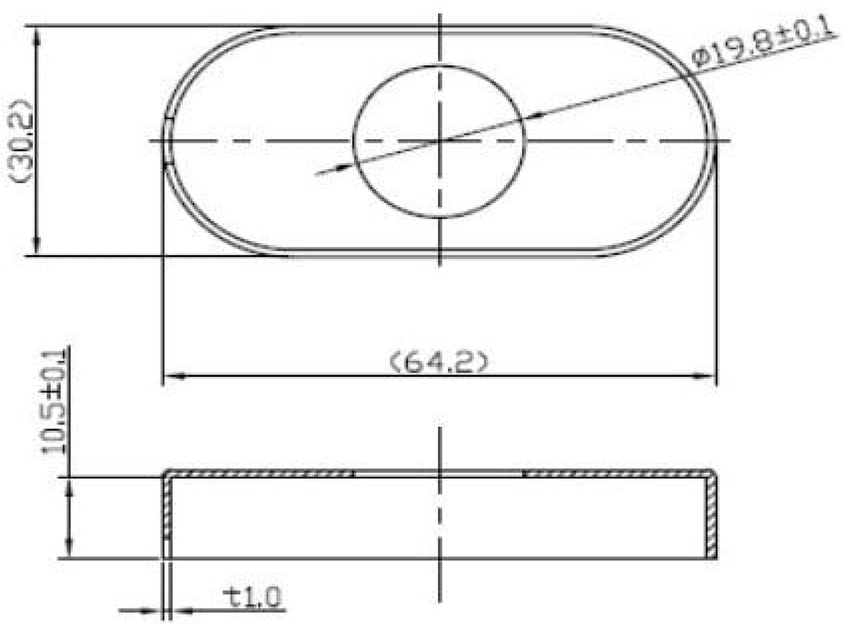
Ø19.8±0.1
(30.2)
(64.2)
10.5±0.1
t1.0

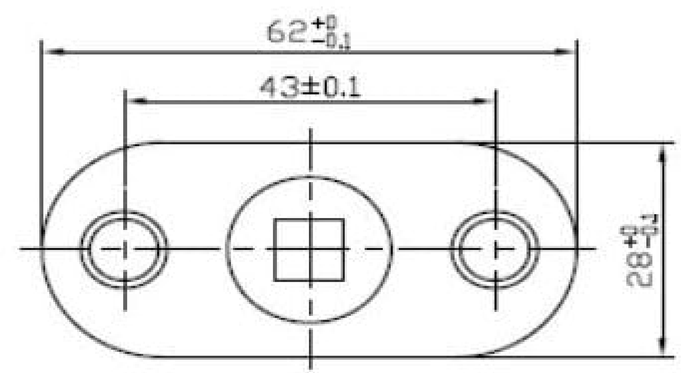
62 +0 −0.1
43±0.1
28 +0 −0.1