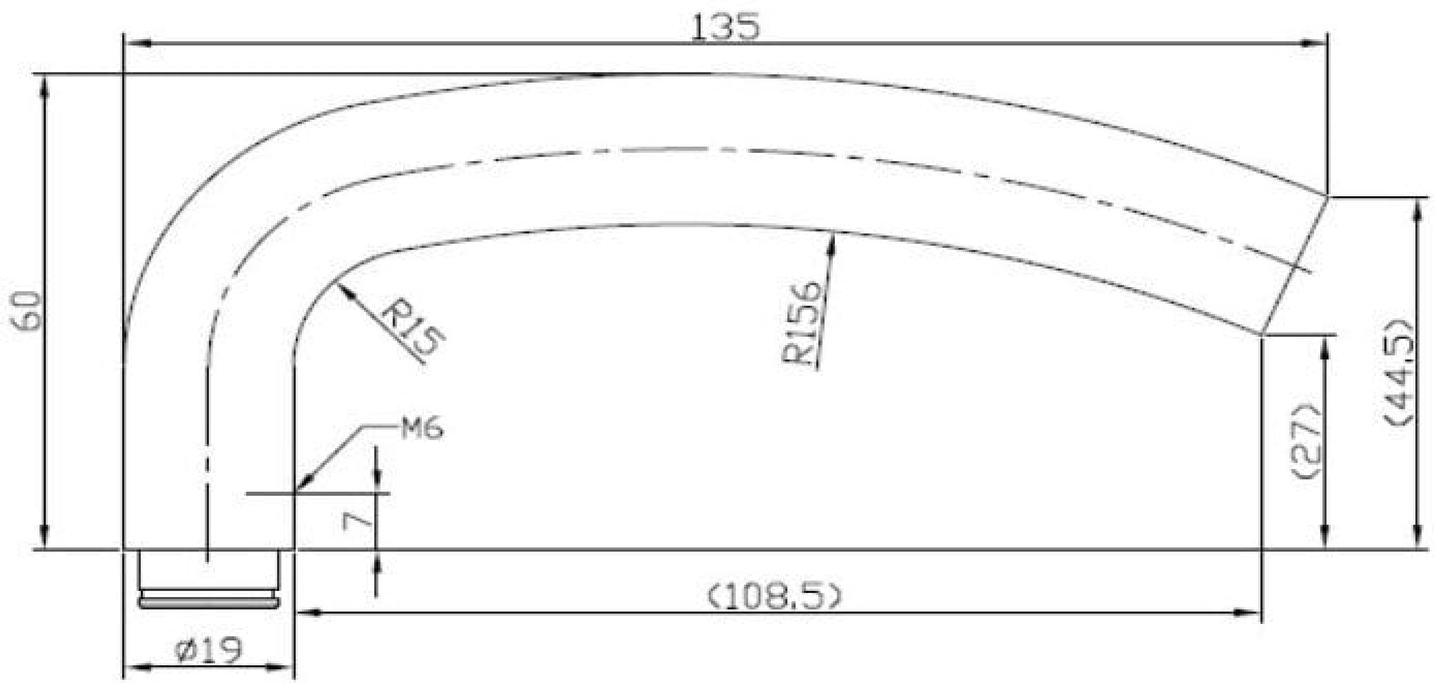
135
60
R15
R156
M6
7
(27)
(44.5)
(108.5)
ø19

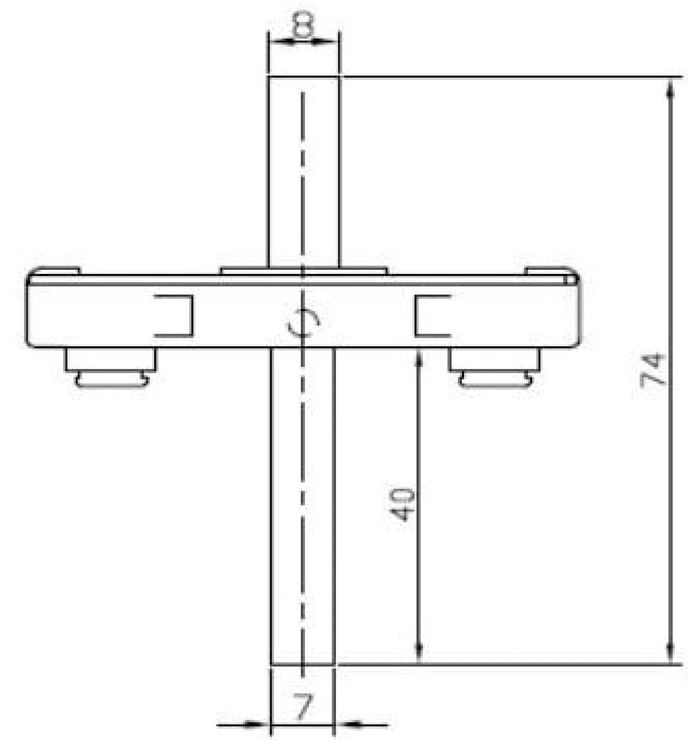
8
74
40
7

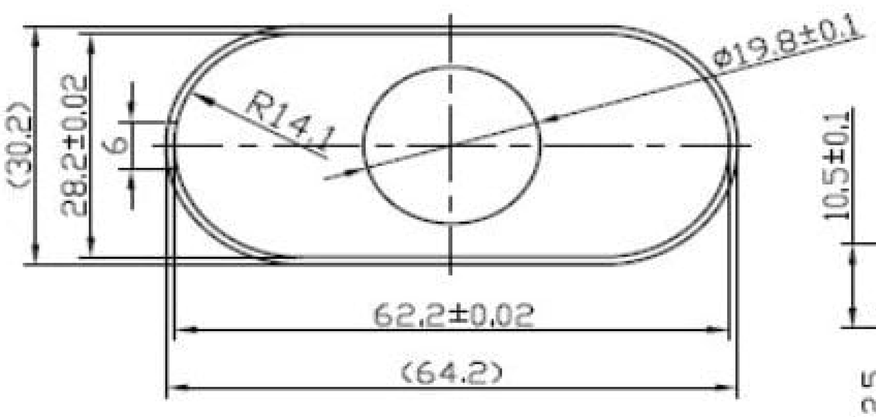
ø19.8±0.1
R14.1
(30.2)
28.2±0.02
6
62.2±0.02
(64.2)

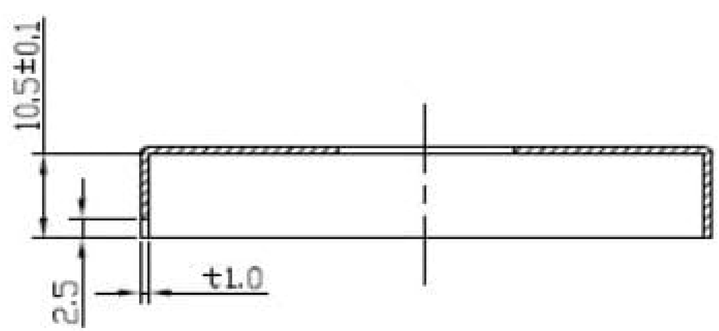
10.5±0.1
2.5
t1.0

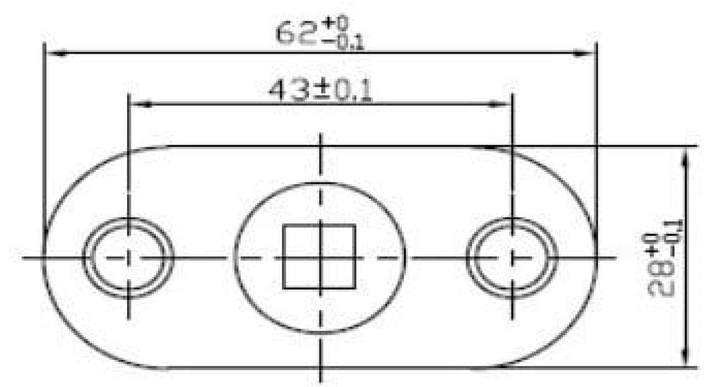
62 +0 −0.1
43±0.1
28 +0 −0.1