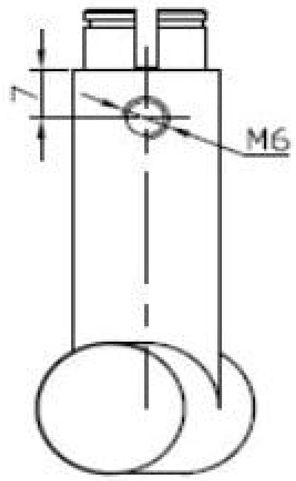
7
M6

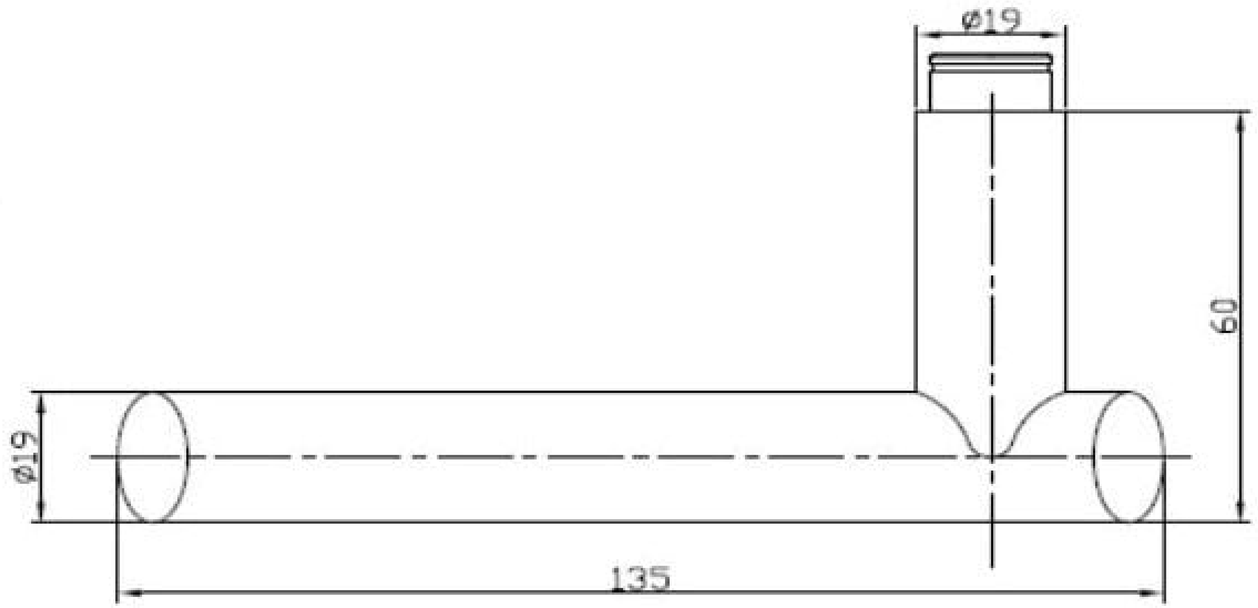
ø19
60
ø19
135

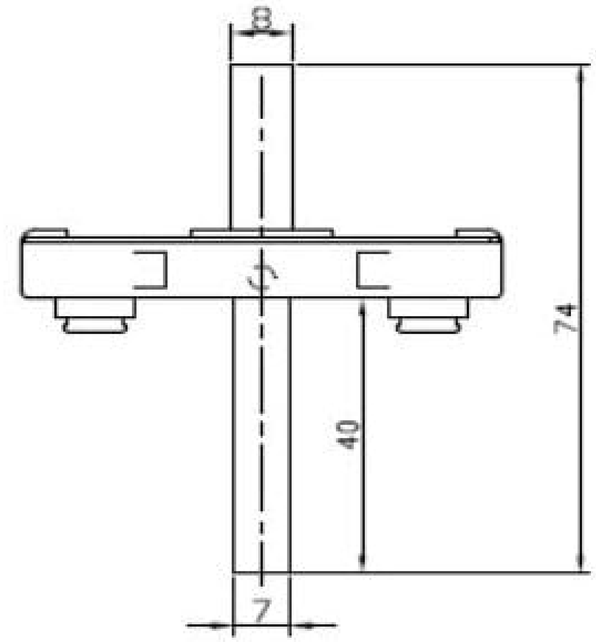
8
74
40
7

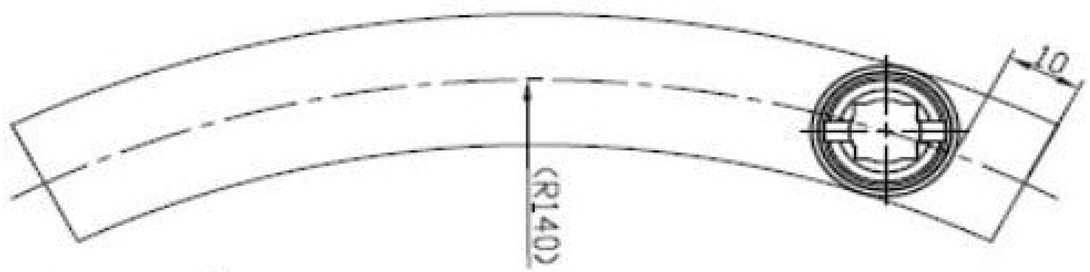
10
(R140)

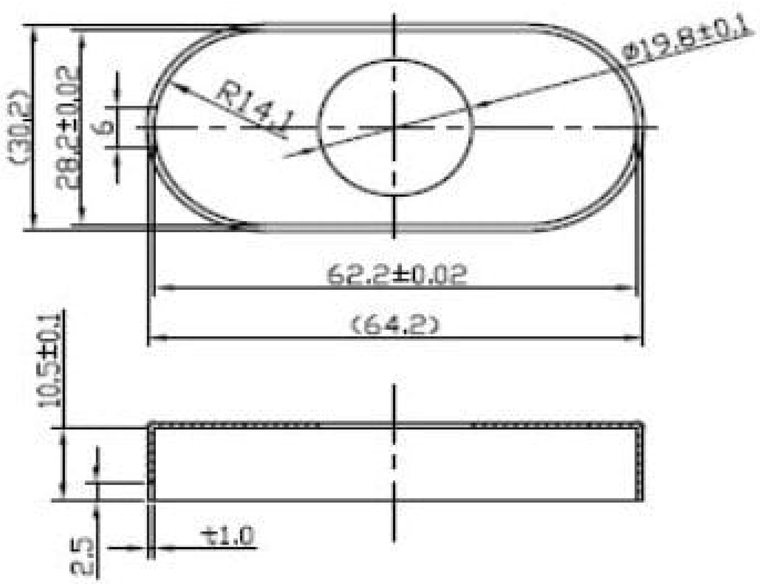
(30.2)
28.2±0.02
6
R14.1
ø19.8±0.1
62.2±0.02
(64.2)
10.5±0.1
2.5
±1.0

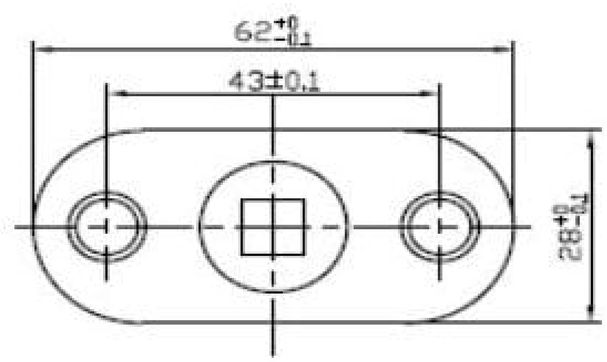
62+0 -0.1
43±0.1
28+0 -0.1