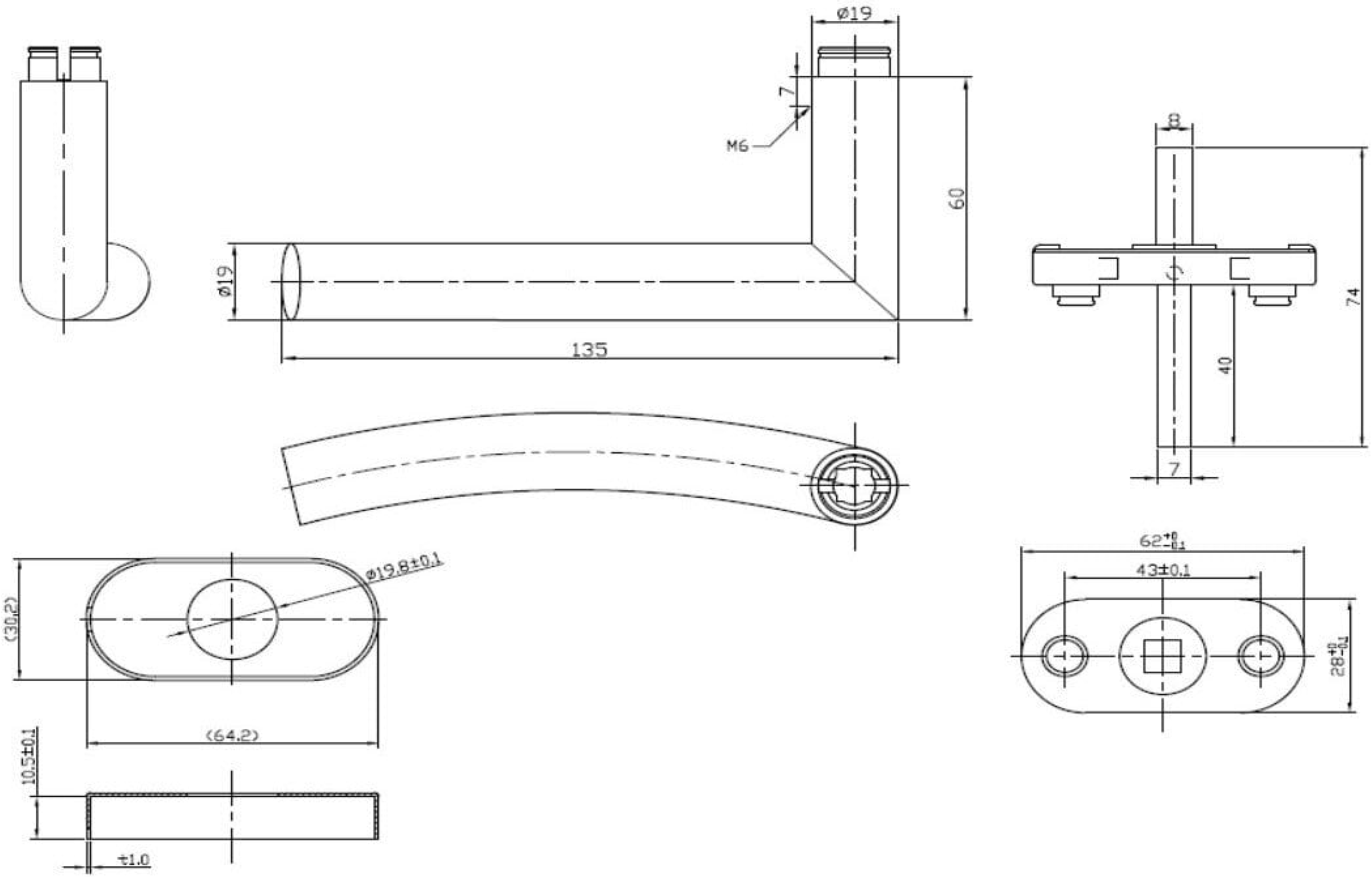
ø19
7
M6
60
ø19
135
8
74
40
7
62+0 -0.1
43±0.1
28+0 -0.1
ø19.8±0.1
(30.2)
(64.2)
10.5±0.1
±1.0